SEPARATING SUBGROUPS OF MAPPING CLASS GROUPS IN HOMOLOGICAL REPRESENTATIONS

ASAF HADARI

Abstract. Let Γ be either the mapping class group of a closed surface of genus ≥ 2, or the automorphism group of a free group of rank ≥ 3. Given any homological representation ρ of Γ corresponding to a finite cover, and any term $\mathcal{I}_k$ of the Johnson filtration, we show that $\rho(\mathcal{I}_k)$ has finite index in $\rho(\mathcal{I})$, the Torelli subgroup of Γ. Since $[\mathcal{I} : \mathcal{I}_k] = \infty$ for $k > 1$, this implies for instance that no such representation is faithful.

1. Introduction

Let $X = X^n_{g,b}$ be an oriented surface of genus g with b boundary components and n punctures. The mapping class group of X, or $\mathrm{Mod}(X) = \mathrm{Mod}^n_{g,b}$ is the group of orientation preserving diffeomorphisms $X \to X$ that fix the boundary and punctures pointwise, up to isotopies that fix the boundary point wise.

Mapping class groups have a large collection of finite dimensional representations called *homological representations*. For every finite characteristic cover $f : Y \to X$ we can associate a representation $\rho = \rho_f : \mathrm{Mod}^{n+1}_{g,b} \to \mathrm{GL}(H_1(Y, \mathbb{Z}))$ in the following way.

Pick a point $\star \in X$. Suppose $f : Y \to X$ corresponds to characteristic subgroup $K \leq \pi_1(X, \star)$. Let $\Gamma \cong \mathrm{Mod}^{n+1}_{g,b}$ be the mapping class group of the surface X' which is obtained from X by adding a puncture at $\star$. We can think of Γ as the group of orientation preserving diffeomorphisms $X \to X$ that fix the boundary, punctures, and $\star$ pointwise up to isotopies that fix the boundary and $\star$ point wise. There is a natural map $\Gamma \to \mathrm{Aut}(\pi_1(X, \star))$. Since, K is a characteristic subgroup, restriction gives a map $\Gamma \to \mathrm{Aut(K)}$. This induces a map $\Gamma \to \mathrm{Aut}(H_1(K, \mathbb{Z})) \cong \mathrm{GL}(H_1(Y, \mathbb{Z}))$.

Our goal in this paper is to address two basic questions about homological representations. These questions fit into a larger meta-question:

Question 1.1. Which properties of the mapping class group can we discern in its homological representations?

The main question question we address in this paper is the following:

Date: August 28, 2019.

Question 1.2. Let $H \leq G \leq \Gamma$ be subgroups of Γ such that $[G : H] = \infty$. Is there a homological representation ρ_f such that $[\rho_f(G) : \rho_f(H)] = \infty$? In other words, can the homological representation theory of mapping class groups discern whether or not one subgroup has infinite index in another?

When H is the trivial group, the answer to question 1.2 is yes. For example in [4] we showed that if the surface X has boundary components then any element of Γ with positive topological entropy has infinite order in some homological representation (and in fact, has eigenvalues off of the unit circle). Yi Liu proved a similar theorem in [9] that holds for closed surfaces as well. In [5], we proved an even stronger result - if H is the trivial group and G is a non-amenable subgroup of Γ, then there is some homological representation ρ_f such that $\rho_f(G)$ is non-amenable (and in particular infinite).

This paper is concerned with the opposite direction - what happens when H is a large subgroup of the mapping class group? I turns out that in this case a very different phenomenon occurs in which the answer to Question 1.2 can be negative. Namely, we show the following:

Theorem 1.3. *Suppose that X is a closed surface of genus ≥ 2. Then there exist subgroups $H \leq G \leq \Gamma$ such that $[G : H] = \infty$ and $[\rho(G) : \rho(H)] < \infty$ for every homological representation ρ.*

The subgroups we use in our proof of Theorem 1.3 are well known subgroups. Let $\mathcal{I} = \mathcal{I}_1$ be the Torelli subgroup of Γ, and $\mathcal{I}_k$ be the k-th term in the Johnson filtration (these groups are defined below in 2). We prove the following:

Theorem 1.4. *Let X be a closed surface of genus ≥ 2.For every $k > 0$, and every homological representation ρ of Γ, $[\rho(\mathcal{I}) : \rho(\mathcal{I}_k)] < \infty$.*

This is enough to prove theorem 1.3 since $[\mathcal{I} : \mathcal{I}_k] = \infty$ for every $i \geq 2$.

We also prove an analog of Theorem 1.4 for $\mathrm{Aut}(F_n)$ with $n \geq 3$. Given any characteristic subgroup $K < F_n$, we get a representation $\rho : \mathrm{Aut}(F_n) \to \mathrm{GL}(H_1(K, \mathbb{Z}))$. The group $\mathrm{Aut}(F_n)$ also has subgroups $\mathcal{I}_k$ (which we define in 2). We prove the following theorem:

Theorem 1.5. *Let $n \geq 3$. For every k and every homological representation ρ of $\mathrm{Aut}(F_n)$, $[\rho(\mathcal{I}) : \rho(\mathcal{I}_k)] < \infty$.*

As part of our proof of Theorem 1.4, we answer an even more basic question whose answer was surprisingly not in the literature - namely: is any homological representation faithful?

Theorem 1.6. *If X is a closed surface of genus ≥ 2 then no homological representation is faithful.*

Theorem 1.6 follows from Theorem 1.4 since $[\mathcal{I} : \mathcal{I}_2] = \infty$. It's also proved directly in Lemma 5.1.

Our final observation is that while our theorems show that the image of one group has finite index in the other, this index need not be 1.

Theorem 1.7. *Let $\mathcal{I}, \mathcal{I}_2, \mathcal{I}_3, \ldots$ be the Johnson filtration of either* $\mathrm{Mod}(X)$ *for X a closed surface of genus ≥ 2 or* $\mathrm{Aut}(F_n)$ *for $n \geq 2$. Then there exists a homological representation ρ with the following property: for any $k > 0$ there exists a number $N \geq k$ such that if $j > N$ then $[\rho(\mathcal{I}_k) : \rho(\mathcal{I}_j)] > 1$.*

1.1. **the image of homological representations.** Theorem 1.4 fits a conjectural description of the image of homological representations. Suppose $f : Y \to X$ is a finite characteristic cover with deck group D. Given a mapping class $\phi \in \Gamma$, any lift $\widetilde{\phi}$ of ϕ to Y normalizes the deck group D. In particular, $\rho_f(\phi)$ normalizes D_*, the image of D in $\mathrm{Sp}(H_1(Y, \mathbb{Z}))$. It is natural to ask the following question:

Question 1.8. Is $\rho_f(\Gamma)$ a finite index subgroup of the normalizer of D_* in $\mathrm{Sp}(H_1(Y, \mathbb{Z}))$? Does a similar phenomenon hold for homological representations of $\mathrm{Aut}(F_n)$?

McMullen addressed this question in [10]. He showed that when the genus of X is zero, the answer to question 1.8 can be negative. However, in every single known case in genus ≥ 2, the answer to this question is positive. For example, Grünewald, Larsen, Lubotzky, and Malestein showed this for the class of redundant covers of closed surfaces in [3] and Looijenga showed it for the class of abelian covers of closed surfaces in [8]. The corresponding question for $\mathrm{Aut}(F_n)$ representations also has a positive answer in every single known case (for example, Grünewald and Lubotzky proved this for the class of redundant covers in in [2]).

Our Theorems 1.4 and 1.5 can be viewed as evidence of a positive answer to Question 1.8 in genus ≥ 2 and for F_n with $n \geq 3$. The normalizers that appear in the question are lattices in high rank semi-simple Lie groups. Since $\mathrm{Mod}(X)/\mathcal{I} \cong \mathrm{Sp}(2g, \mathbb{Z})$, we get that a positive answer to the mapping class group portion of Question 1.8 implies that the image of $\mathcal{I}$ is also a lattice in a high rank semi-simple Lie group. By the Margulis normal subgroup theorem, every normal subgroup of such a lattice is either finite or has finite index. In particular, all of its quotients are either finite or semi-simple. Since $\mathcal{I}_k \lhd \mathcal{I}$ for every k and $\mathcal{I}/\mathcal{I}_k$ is a nilpotent group, we must have that the image of $\mathcal{I}_k$ has finite index in the image of $\mathcal{I}$. Thus, a positive answer to Question 1.8 would imply our Theorem 1.4.

Acknowledgments We would like to thank Dan Margalit for helpful comments about the paper.

1.2. **Sketch of Proof of Theorem 1.4.** The group Γ acts on $\mathcal{I}/\mathcal{I}_2$ by conjugation. Since $\mathcal{I}$ acts trivially on this quotient, $\mathcal{I}/\mathcal{I}_2$ becomes a $\mathrm{Sp}(2g,\mathbb{Z})$-module. Denote $H = H_1(X,\mathbb{Z})$. By work of Dennis Johnson, it is known that $\mathcal{I}/\mathcal{I}_2 \cong \Lambda^3 H$ as a $\mathrm{Sp}(2g,\mathbb{Z})$-representation (see [6]).

This representation decomposes as a sum of irreducibles as $\Lambda^3 H \cong H \oplus \Lambda^3 H/H$. The first factor is the image of the point pushing subgroup and the second factor is the image of those elements of $\mathcal{I}$ that are not in the kernel of the map $\mathrm{Mod}(X') \to \mathrm{Mod}(X)$ given by forgetting the puncture $\star$.

In Section 4 we discuss point pushing maps and a related notion called curve pushing maps. We also give an explicit description of the image of certain push maps under homological representations. In Section 5, we use this description to construct for each homological representation ρ elements $\phi, \psi \in \Gamma$ such that:

(a) $\phi, \psi \in \mathcal{I} \setminus \mathcal{I}_2$.
(b) $\phi, \psi \in \ker(\rho)$ (which immediately proves Theorem 1.6)
(c) ϕ is a point pushing map that projects to the first irreducible factor of $\mathcal{I}/\mathcal{I}_2$.
(d) ψ is a curve pushing map that projects to the second irreducible factor of $\mathcal{I}/\mathcal{I}_2$.

Since $\phi, \psi \in \ker(\rho)$, their conjugacy classes are as well. This means that the $\mathrm{Sp}(2g,\mathbb{Z})$ orbits in $\mathcal{I}/\mathcal{I}_2$ are in the kernel of the map $\mathcal{I} \to \rho(\mathcal{I})/\rho(\mathcal{I}_2)$. Irreducibility now gives the result.

For $k \geq 2$, we have that $\mathcal{I}/\mathcal{I}_k$ is a nilpotent group. In Lemma 3.2, we show that if N is a finitely generated nilpotent group and $K \lhd N$ projects to a finite index subgroup of $N/[N,N]$ then K has finite index in N. Applying this to $\ker(\rho)$ now gives the result.

In Section 3 we carry out a similar proof for the $\mathrm{Aut}(F_n)$ case. This case is much simpler. The representation $\Lambda^3 H$ is an irreducible $\mathrm{SL}(n,\mathbb{Z})$-representation, so we only need to construct one map $\phi \in \mathcal{I} \setminus \mathcal{I}_2 \cap \ker(\rho)$. Furthermore, this map ends up being easier to construct - it's a Nielsen transformation that is simple to describe.

2. The Torelli group and the Johnson filtration

Let Γ be either $\mathrm{Aut}(F_n)$, or $\mathrm{Mod}(X')$ where X is a closed surface of genus ≥ 2 and X' is obtained from X by adding the puncture $\star$. Let π be either F_n or $\pi_1(X,\star)$.

There is a natural map $\Gamma \to \mathrm{Aut}(\pi)$. Whenever $L \lhd \pi$ is a characteristic subgroup, we get a map $\Gamma \to \mathrm{Aut}(\pi/L)$. The sequence of groups $L_1 = [\pi,\pi]$, $L_{i+1} = [\pi, L_i]$ is called the *lower central series of* π. All the groups L_i are characteristic subgroups of π.

The kernel of the map $\Gamma \to \mathrm{Aut}(\pi/L_k)$ is called the *k-th term of the Johnson filtration*. We denote this kernel $\mathcal{I}_k$. When $k = 1$ the group is called the *Torelli subgroup of* Γ and we denote it $\mathcal{I}$.

We will require three standard facts about the Johnson filtration:

(a) $\mathcal{I}/\mathcal{I}_k$ is a finitely generated nilpotent group.
(b) The group $\mathcal{I}/\mathcal{I}_2$ is abelian and the map $\mathcal{I}/[\mathcal{I},\mathcal{I}] \to \mathcal{I}/\mathcal{I}_2$ has finite kernel. ([7]).
(c) The group Γ acts on $\mathcal{I}/\mathcal{I}_2$ by conjugation. As a $\Gamma/\mathcal{I}$-module, $\mathcal{I}/CI_2 \cong \Lambda^3 H$, where $H = \pi/[\pi,\pi]$.

3. The $\mathrm{Aut}(F_n)$ case

Let $n \geq 3$, $K \lhd F_n$ be a characteristic subgroup, and $\rho_K : \mathrm{Aut}(F_n) \to \mathrm{GL}(H_1(K,\mathbb{Z}))$ be the corresponding homological representation.

Proposition 3.1. *In the notation above* $[\rho_K(\mathcal{I}) : \rho_K(\mathcal{I}_2)] < \infty$.

Proof. Let $m = [F_n : K]$, and $F_n = \langle a_1, a_2, \ldots, a_n\rangle$. For every fixed $1 \leq i \neq j \leq n$ the endomorphism $F_n \to F_n$ that sends $a_i \to a_i a_j$ and $a_k \to a_k$ for $k \neq i$ is called a *Nielsen transformation*, and is well known to be an automorphism. Let $\phi : F_n \to F_n$ be given by $\phi(a_1) = a_1[a_2^m, a_3^m]$, and $\phi(a_k) = a_k$ for $k > 1$. The endomorphism ϕ can be written as a product of Nielsen transformations, and is thus an automorphism.

<u>Claim 1:</u> $\phi \in \mathrm{Ker}(\rho_K)$. To see this claim, let $X = \bigvee_1^n S^1$ be a join of n circles at a point which we call p. Then $\pi_1(X,p) \cong F_n$, and the automorphism ϕ is induced by a homotopy equivalence $\varphi : X \to X$ that fixes p. Let $X_0 \to X$ be the finite sheeted cover corresponding to the subgroup $K < F_n$. Since K is characteristic, we can lift φ to a map $\varphi_0 : X_0 \to X_0$ fixing some lift p_0 of p.

The spaces X and X_0 are graphs, and are thus also simplicial complexes. Let C_* be the chain complex of simplicial chains in X_0. Denote by $\varphi_0^\# : C_1 \to C_1$ the map induced by φ_0. Note that $a_2^m, a_3^m \in K$. Thus, $[a_2^m, a_3^m] \in [K,K]$. Given an edge r in X_0 that is a lift of an edge corresponding to a_i for $i > 1$, we have that $\varphi_0(r) = r$. Given an edge r that is a lift of a_1, we have that $\varphi_0(r)$ is an edge path consisting of r followed by a cycle whose class in $H_1(X_0)$ is trivial. Thus $\varphi_0^\#$ is the identity map.

Since $H_1(K)$ can be identified with the subspace of 1-cycles in C_1, and $\rho_K(\phi)$ is given by restricting $\varphi_0^\#$ to this subspace, we get that $\rho_k(\phi)$ is the identity map.

Claim 2: $\phi \in \mathcal{I} \setminus \mathcal{I}_2$. Note that , $a_1^{-1}(\phi(a_1)) = [a_2^m, a_3^m]$ and $a_i^{-1}\phi(a_i)$ for $i \geq 2$. Since $[a_2^m, a_3^m] \in [F_n, F_n]$ we get that $\phi \in \mathcal{I}$. Since $[a_2^m, a_3^m] \notin [F_n, [F_n, F_n]]$ we get that $\phi \notin \mathcal{I}_2$.

We are now ready to complete the proof. The quotient $\mathcal{I}/\mathcal{I}_2$, as a $\mathrm{Aut}(F_n)$ module is $\Lambda^3 H$. Since $\mathcal{I}$ acts trivially on this module, $\mathcal{I}/\mathcal{I}_2$ is a $\mathrm{Aut}(F_n)/\mathcal{I} \cong SL(n, \mathbb{Z})$-module.

Let $[\phi]$ be the image of the automorphism ϕ constructed above in $\mathcal{I}/\mathcal{I}_2$. By claim 1, $[\phi]$ is in the kernel of the map $\mathcal{I}/\mathcal{I}_2 \to \rho_K(\mathcal{I})/\rho_K(\mathcal{I}_2)$. Thus, the entire $\mathrm{SL}_n(\mathbb{Z})$ orbit of $[\phi]$ is in this kernel. By claim 2, $[\phi] \neq 0$.

Since $\Lambda^3 H$ is an irreducible $\mathrm{SL}(n, \mathbb{Z})$ representation, we have that $\mathrm{SL}(n, \mathbb{Z})[\phi]$ generates a finite index subgroup of $\Lambda^3 H$. Thus $\rho_K(\mathcal{I})/\rho_K(\mathcal{I}_2)$ is finite, as desired.

□

Proposition 3.1 is a subcase of Theorem 1.5, namely - the case where $k = 2$. Since $\mathcal{I}/\mathcal{I}_k$ is nilpotent for every k, Theorem 1.5 follow directly from Proposition 3.1 and from the following lemma:

Lemma 3.2. *Let N be a finitely generated nilpotent group. Let $K \lhd N$ be a subgroup such that the image of K in $N/[N, N]$ has finite index in $N/[N, N]$. Then $[N : K] < \infty$.*

Proof. Denote by N_i the i-th term in the lower central series of N. Let $a_1, \ldots, a_m \in N$ be a set of elements that project to a free generating set of $N/[N, N]$. For elements $g_1, \ldots, g_k \in N$, denote by $[g_1, \ldots, g_k]$ the repeated commutator $[g_1, [g_2, \ldots, g_k] \ldots]$. The following two facts are standard:

(a) The group N_1/N_{i+1} is an abelian group generated by the images of all elements of the form $[x_1, \ldots, x_i]$ where $x_1, \ldots, x_i \in \{a_1, \ldots, a_n\}$.
(b) The map $N^i \to N_i/N_{i+1}$ given by $(x_1, \ldots, x_i) \to [x_1, \ldots, x_i]$ is a homomorphism in each coordinate.

We now proceed by induction on the length of the lower central series of N. The lemma is obviously true for N abelian. Suppose it is true for N with a lower central series of length i. The multi linearity of the repeated commutator, together with our inductive hypothesis give that $[N_i : N_i \cap K] < \infty$.

Given any $x \in N$, the inductive hypothesis gives that there exists a number l such that the image of x^l in N/N_{i-1} is contained in the image of K in this group. This means that there is a y such that $y^l \in K$ and $xy^{-1} \in N_i$. Write $x = yh$. Since $[N_i : N_i \cap K] < \infty$, there is a m such that $h^m \in K$. Since N_i is central in N, we have that $(yh)^{lm} = (y^l)^m (h^m)^l \in K$. A finitely generated nilpotent group of bounded exponent is finite, which concludes the proof.

□

4. Pushing maps

4.1. **Point pushing and curve pushing.** We begin by recalling a standard theorem from differential topology:

Theorem 4.1. *(*The isotopy extension theorem*) Let M be a compact manifold (possibly with boundary) and N a boundary less sub manifold. Let $H : N \times [0,1] \to M$ be a smooth homotopy such that $H_t(x) = H(x,t) : N \to M$ is an embedding for each t and H_0 is the inclusion of N into M. Then H can be extended to a smooth isotopy $\widetilde{H} : M \times [0,1] \to M$ where $\widetilde{H}_t(x) = \widetilde{H}(x,t) : M \to M$ is a diffeomorphism for each t, and $\widetilde{H}_0$ is the identity map.*

Extensions of homotopies H that have the added property that H_1 is the identity map on N allow us to construct several interesting families of mapping classes, which we will use to mimic the proof of Theorem 1.5 for mapping class groups.

The first such family is very well known. Suppose M is a surface, and $p \in M$ is a point. Let $N = \{p\}$. A homotopy H satisfying the condition $H_0 = H_1 = \mathrm{Id}$ is just a closed curve γ that is based at p. Let $\widetilde{H}$ be the extended isotopy. Let $M_0 = M \setminus \{p\}$. The diffeomorphism $\widetilde{H}_1$ can be restricted to M_0. This restriction is known as the *point pushing map about the curve* γ. By construction $\widetilde{H}_1$ is isotopic to $\widetilde{H}_0 = \mathrm{Id}$ as maps from $M \to M$. However, if γ is not null-homotopic then their restrictions are not isotopic as maps $M_0 \to M_0$.

Now, suppose $N \subset M$ consists of a finite set of points $N = \{p_1, \dots, p_r\}$ and once again assume that $H_0 = H_1$. This means that each point p_i traces a closed curve γ_i. We call the restriction of the diffeomorphism $\widetilde{H}_1$ to $M_0 = M \setminus M$ a *multi-point pushing map about the curves* $\gamma_1, \dots, \gamma_r$.

Let X be a surface and δ a non-peripheral, non-separating simple closed curve. Let X_0 be the surface obtained from X by cutting along δ. The surface X_0 has two more boundary components (which we call δ_1, δ_2) than X, and its genus is one less than the genus of X. Let $\overline{X}$ be the surface obtained from X_0 by gluing a disk to δ_1, and adding a marked point p in this disk.

Choose a closed curve γ in $\overline{X}$ that is based at p. The curve γ gives a homotopy of embeddings of the point p into $\overline{X}$. Extend this homotopy to a isotopy $\widetilde{H} : \overline{X} \times [0,1] \to \overline{X}$. If B is a sufficiently small ball centered at p, we can modify $\overline{H}$ so that $\overline{H}_1$ is the identity map when restricted to B.

Let $\overline{f} = \widehat{H}_1$. The surface X can be obtained from $\overline{X}$ by removing the interior of B, and gluing ∂B to δ_2. Since $\overline{f}$ fixes ∂B and δ_2 point wise, it defines a map $f : X \to X$, which we call a *curve pushing map*. We say that f *pushes the curve* δ *along the curve* γ.

Note that γ is not a closed curve in X, but we can think of it as a closed curve in (X, δ). Throughout our discussion, when we refer to γ as a closed curve we mean it in this sense.

We can make a similar definition when the curve δ is separating. Suppose it separates X into two components, X_0, X_1. We choose one of them, say Z_0 and glue in a disk to X_0 along δ equipped with a marked point p. We pick a closed curve γ in X_0 that is based at p and proceed as before.

By replacing the curve δ with a multi-curve (a finite collection of mutually disjoint simple closed curves) we can define a *mutli-curve pushing map.*

4.2. **The image of push maps under homological representations.**

4.2.1. *The action of point and multi-point pushing maps on homology.* Let X be a surface with at least one puncture. Let $\phi \in \mathrm{Mod}(X)$ be a point pushing map about the closed curve γ which is based at the puncture p and whose homology class (relative to the puncture p) we denote by c. Let d be the homology class of a small positively oriented loop about the puncture p. If the surface X has only one puncture, then every point pushing map acts trivially on $H_1(X, \mathbb{Z})$. This no longer holds when X can have multiple punctures.

Suppose first that γ is a simple closed curve. Let α be a closed curve in X with homology class a. The curve $\phi(\alpha)$ is obtained from α in the following way. For every intersection of γ and α, two strands that run alongside γ in opposite orientations are attached to α using the surgery depicted in the figure 1. If we use $[\cdot]$ to denote the homology class of a curve, and $\widehat{i}(\cdot,\cdot)$ to denote the oriented intersection pairing we get that:

$$\phi(a) = a + \widehat{i}(a, c)d$$

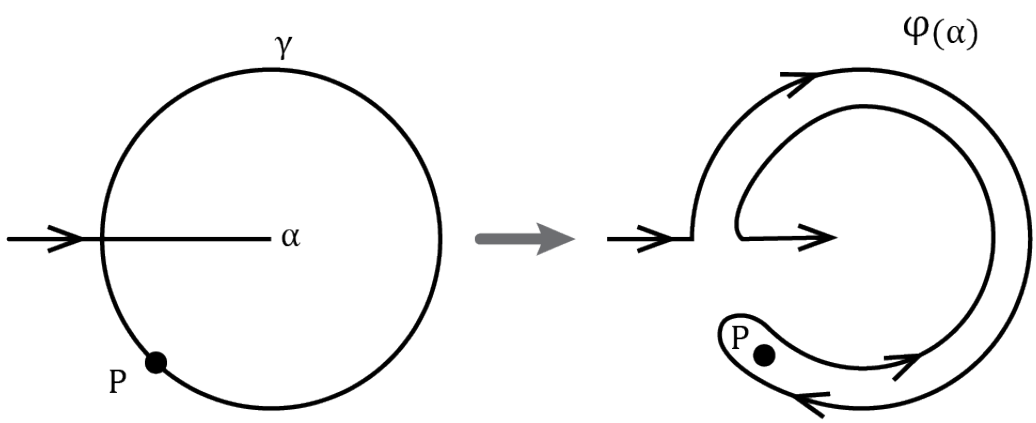

Figure 1.

Suppose now that the curve γ has self intersections. Perform the surgery described above by attaching two copies that run along γ in opposite orientations to each intersection point. Label the intersection points cyclically by $x_1, \ldots, x_s$. At the intersection point x_i add $2i$ strands (i in each orientation) parallel to the portion of γ that exits the intersection the second time it pases through it. To find the image $\phi(c)$, at each self intersection of γ perform the surgery described in Figure 2. At each such intersection there are an equal number of positively oriented and negatively oriented strands parallel to γ in each direction. Thus, even if γ has self intersection, the same formula holds:

$$\phi(a) = a + \widehat{i}(a, c)d$$

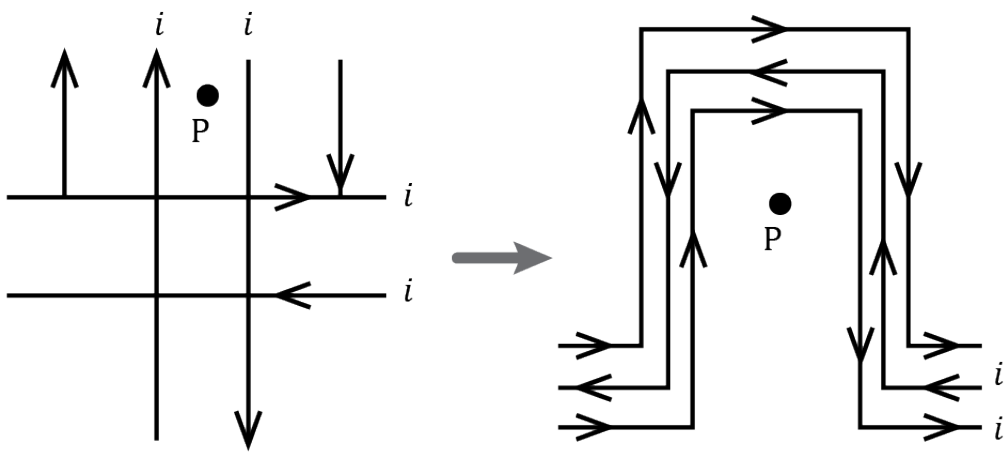

FIGURE 2.

Now suppose that ϕ is a multi-point push map, in which the punctures $p_1, \ldots, p_r$ are pushed about the curves $\gamma_1, \ldots, \gamma_r$ (whose homology classes we denote by $c_1, \ldots, c_r$). Let $d_1, \ldots, d_r$ be small, positively oriented loops about the punctures $p_1, \ldots, p_r$. The same argument that we used for the point pushing map gives a similar description (this is illustrated in Figure 3).

Lemma 4.2. *In the notation above, for every curve α, we have that:*

$$\phi(a) = a + \sum_{i=1}^{r} \widehat{i}(a, c_i)d_i$$

4.2.2. *The action of curve and multi-curve pushing maps on homology.* Suppose that ϕ is the map given by pushing the curve δ (whose homology class we denote by d) along the curve γ. For any curve α that does not intersect

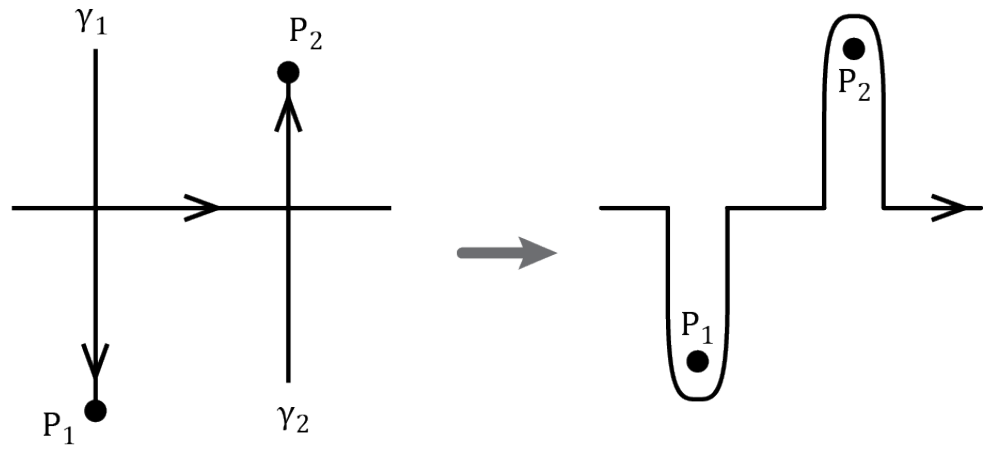

FIGURE 3.

δ, the same picture as the point pushing case holds here (this is illustrated in Figure 4). We get that once again, $\phi(a) = a + \widehat{i}(a, c)d$.

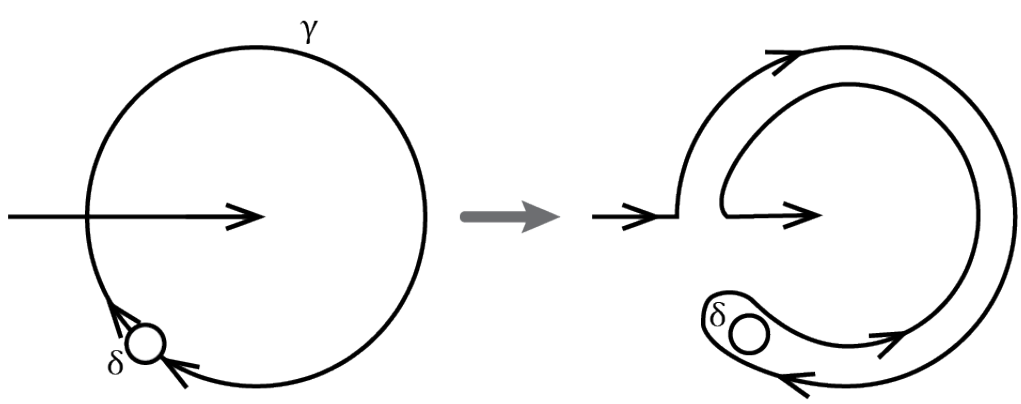

FIGURE 4.

In the curve pushing case we have an added complication: the curve pushing map is defined by cutting X along δ to form the surface X_0, pushing along the curve γ in X_0, and regluing two copies of δ to re-form the surface X. As we see in figure 4, calculating $\phi(c)$ is very similar to the the point pushing case, as long as α is a closed curve in X_0. We need to separately determine $\phi(\alpha)$ for arcs in X_0 whose endpoints lie on the two different copies of δ. Let δ_1, δ_2 be those copies. We need to calculate the action of ϕ on $H_1(X, \delta_1 \cup \delta_2)$.

Suppose first that γ is a simple closed curve and α is an arc, one of whose endpoints lies on δ_1. To obtain $\phi(\alpha)$ we add to α one strand parallel to γ to α using the surgery depicted in figure 5.

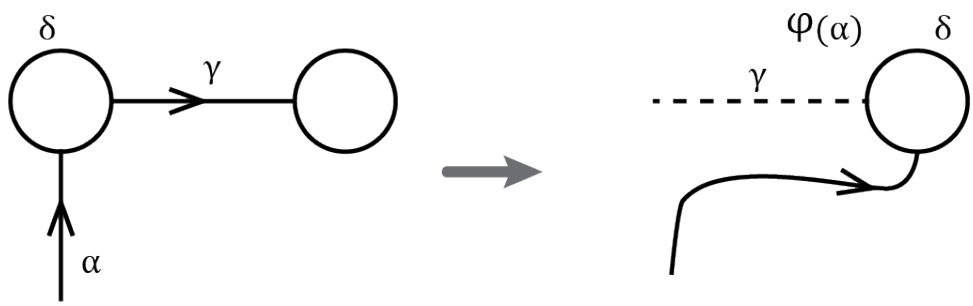

FIGURE 5.

Now suppose that γ has self intersections: $x_1, \ldots, x_s$ arranged from the beginning of γ till its end. To find $\phi(\alpha)$ add strand parallel copy to γ as above. Then, following the order $x_1, \ldots, x_s$, at x_i add two parallel in opposite direction along the section of γ exiting the intersection for the second time. Then perform the surgery described in Figure 6.

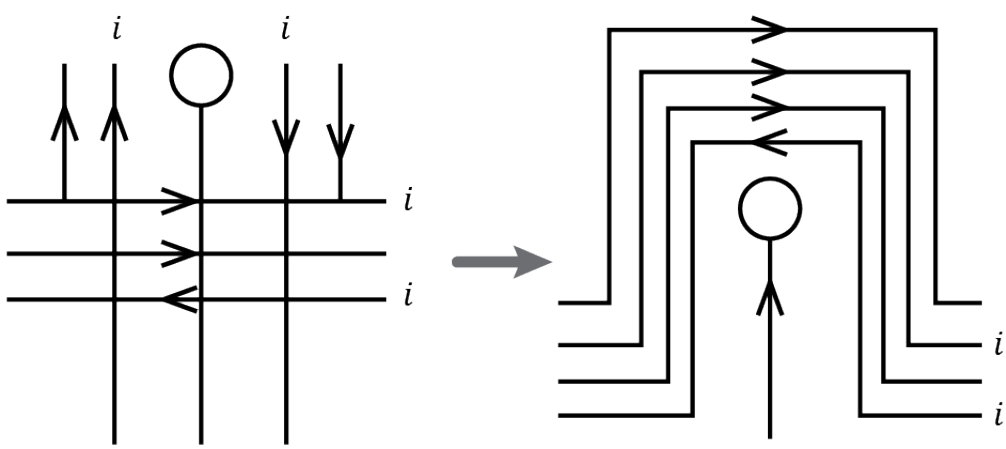

FIGURE 6.

As opposed to the point pushing case, it is no longer the case that at each intersection there are an equal number of positively oriented and negatively oriented strands parallel to γ in each direction. For each x_j, let $I_j = \widehat{i}(e_j, f_j)$ where e_j is the portion of γ that hits the intersection first, and f_j is the portion

of γ that hits the intersection second. Let $I_\gamma = \sum I_j$. This number determines how many copies of d are added at the j-th intersection.

Now let α be a closed curve in X. Putting the descriptions above together, we get that

$$\phi(a) = a + \widehat{i}(a,c)d + \widehat{i}(a,d)\big(c + I_\gamma d\big)$$

Now let $\delta_1, \dots, \delta_r$ be pairwise disjoint simple closed curves with homology classes $d_1, \dots, d_r$ and take ϕ to be the multi-curve pushing map that pushes δ_j about γ_j (whose homology class is denoted c_j). We get the following.

Lemma 4.3. *In the notation above, for any curve α in X:*

$$\phi(a) = a + \sum_j \widehat{i}(a,c_j)d_j + \widehat{i}(a,d_j)\big(c_j + I_{\gamma_j} d_j\big)$$

4.3. **Lifts of push maps to covers.** Point, multi-point, curve, and multi-curve pushing maps can have very complicated actions on the homology of covers of a surface. For instant, the point pushing subgroup of X contains many pseudo-Anosov elements (a point pushing map is pseudo-Anosov whenever the pushing curve fills the surface). By [4], for any pseudo-Anosov element of the point pushing subgroup there is a finite cover $Y \to X$ to which f lifts, such that the action of the lift of f on $H_1(Y, \mathbb{Z})$ has eigenvalues off the unit circle. As a further example, by [5] there is a finite cover $Y \to X$ where the image of the entire point pushing subgroup under the homological representation is non-solvable.

This complexity is not immediately apparent from the descriptions given in Lemmas 4.2 and 4.3. Part of the issue is that the lift of a point (resp. curve) pushing map to a cover need not be a point (resp. curve) or even a multi-point (resp. multi-curve) pushing map. In the point pushing case this is caused by the fact that if $Y \to X$ is a finite cover and p is a puncture of X then the covering map may be branched over p. If p is pushed about the curve γ, and $\widetilde{p}$ is a lift of the puncture p in Y, there may not be only one lift of the curve γ originating at $\widetilde{p}$

Nevertheless, sometimes lifts of push maps to finite covers are themselves push maps, and their images under homological representations can thus be described by Lemmas 4.2 and 4.3.

We begin by describing a sufficient criterion for this to happen in the curve pushing case. Let δ be a simple closed curve in X. Identify δ with $\mathbb{R}/\mathbb{Z}$. Let γ be a curve in X originating at a point in δ corresponding to $p \in \mathbb{R}/\mathbb{Z}$ and terminating at the point $q = p + \frac{1}{2}$.

Let $Y \to X$ be a regular finite cover. Let σ be the element of the deck group of $Y \to X$ corresponding to δ, and let s be its order. Suppose that δ^s lifts to Y for some s. Fix a lift $\widetilde{\delta}$ of δ^s and let $\widetilde{p_0}, \dots, \widetilde{p_{s-1}}, \widetilde{q_0}, \dots, \widetilde{q_{s-1}} \in \mathbb{R}/s\mathbb{Z}$ be the

lifts of p, q in this $\widetilde{\delta}$ arranged cyclically. Lift the curve γ to $\widetilde{\gamma}$ originating at p_0. Suppose this curve terminates at $\widetilde{q_j}$.

We say that γ satisfies the *cyclic generation criterion* if the integer j generates the group $\mathbb{Z}/s\mathbb{Z}$. If this is the case, then: $\bigcup_{i=0}^{s-1} \sigma^i \widetilde{\gamma}$ is a $\langle\sigma\rangle$ invariant set consisting of a single curve which we call $\widetilde{\gamma}^s$.This curve passes through all the lifts $\widetilde{p_0}, \ldots, \widetilde{p_{s-1}}, \widetilde{q_0}, \ldots, \widetilde{q_{s-1}}$. The curve $\widetilde{\gamma}^s$ is simply a lift of γ^s to Y, and by construction there is a unique such lift incident at the curve $\widetilde{\delta}$. Since Y is regular, this is the case at every other lift of δ^s.

Let $\phi \in \mathrm{Mod}(X)$ be the push map given by pushing δ about γ^s. By construction, the lift of ϕ to Y is simply the multi-curve pushing map that pushes each lift of δ about each lift of $\widetilde{\gamma}^s$. Figure 7 shows that if γ does not satisfy the cyclic generation criterion there can be multiple lifts of the curve γ^s at the loop $\widetilde{\delta}$ and hence the lift of ϕ is not a multi-curve pushing map.

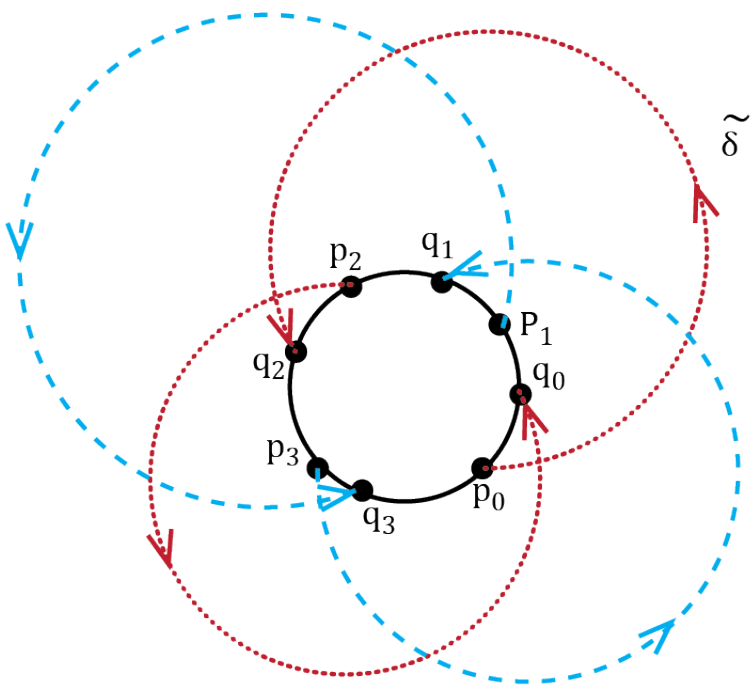

FIGURE 7.

5. Proof of Theorem 1.4

We are now ready to construct push maps that mimic the properties of the map constructed in the proof of Theorem 1.5. Let X be a closed surface of genus ≥ 2, and $X' = X \setminus \{\star\}$ for some basepoint $\star$. Let $\Gamma = \mathrm{Mod}(X')$. Let $Y \to X$ be a characteristic cover. Let ρ be the corresponding homological representation.

Lemma 5.1. *There exist maps $\phi, \psi \in (\mathcal{I} \setminus \mathcal{I}_2) \cap \ker \rho$ such that ϕ is a point pushing map and ψ is a curve pushing map whose image in* $\mathrm{Mod}(X)$ *is non-trivial.*

Proof. Pick a element of $\pi_1(X, \star)$ whose projection to $H = H_1(X, \mathbb{Z})$ is not zero. Let ϕ be the point pushing map about this curve. Since ϕ is a point pushing map, we have that $\phi \in \mathcal{I}$. As stated in the introduction, we have that $\mathcal{I}/\mathcal{I}_2 \cong H \oplus \Lambda^3/H$, where point pushing maps are sent to the first factor using the abelianization map $\pi_1(X, \star) \to H$. By our choice of a curve in X, we have that $\phi \notin \mathcal{I}_2$.

Finally, note that since the cover $Y \to X$ is not branched over the point $\star$, the lift of ϕ to $\mathrm{Mod}(Y)$ is a multi-point pushing map. Since Y does not have punctures, Lemma 4.2 gives that $\phi \in \ker \rho$.

To construct the map ψ, start with a separating simple closed curve δ in X (we can choose one because the genus of X is at least 2). Let X_0 be the surface described in section 4, and let $Y_0 \to X_0$ be the corresponding (possibly branched) cover. Choose a curve γ in X_0 with the following properties:

(a) There exists a lift of γ to Y_0 that is a closed curve that passes through every lift of δ, and satisfies the cyclic generation criterion at each such lift.
(b) The homology class c of γ is not equal to 0.

Let $\psi \in \mathrm{Mod}(X)$ be the push map that pushes the curve δ along the curve γ. Let T_δ be the Dehn twist about δ. By our assumption on γ, ψ^s lifts to a multi-curve pushing map for some s.

Let $\widetilde{\delta}_1, \ldots, \widetilde{\delta}_r$ be the lifts of δ, and $\gamma_1, \ldots, \gamma_r$ be the curves about which they are being pushed. The curves $\gamma_1, \ldots, \gamma_r$ all have the same homology class - a lift of γ^s which we denote by $\widetilde{\gamma}$. Since $\bigcup_{j=1}^{r} \widetilde{\delta}_j$ separates Y, and c_j's are all equal to each other, the term $\sum_j \widehat{i}(a, d_j)\big(c_j + I_{\gamma_j} d_j\big)$ that appears in Lemma 4.3 is 0. Similarly, since γ passes through all the lifts of δ and these separate Y, we get that the term $\sum_j \widehat{i}(a, c_j) d_j$ is also 0. Lemma 4.3 now gives that $\psi \in \ker \rho$. This implies that $\psi \in \mathcal{I}$.

It now remains to be seen that we can take $\psi \notin \mathcal{I}_2$. Recall that δ separates X into two subsurfaces - X_0, X_1, where X_1 is pushed about a curve in

X_0. Let $a_1, b_1, \ldots, a_g, b_g$ be a standard generating set for $\pi_1(X, \star)$ such that $a_1, b_1, \ldots, a_j, b_j$ is a standard generating set for $\pi_1(X_1, \star)$. It is a standard calculation that the image of ψ in $\mathcal{I}/\mathcal{I}_2 \cong \Lambda^3 H$ is $\sum_{i=1}^{j} [a_1] \wedge [b_i] \wedge c$ (cf. Section 6.6.2 in [1]). Since this is not 0, we have that $\psi \notin \mathcal{I}_2$.

□

We are now ready to prove Theorem 1.4.

Proof. As we did before, decompose the $\mathrm{Sp}(2g, \mathbb{Z})$-representation $\Lambda^3 H$ into irreducible representations as $\Lambda^3 H \cong H \bigoplus \Lambda^3 H/H$ where the first factor is the image of the point-pushing maps and the second factor is the image of maps that are not in the kernel of the forgetful map $\mathrm{Mod}(X') \to \mathrm{Mod}(X)$, where X' is the surface obtained from X by puncturing at $\star$. Lemma 5.1 gives a point pushing map $\phi \in \mathcal{I}$ that has non-zero image in the first factor and a curve pushing map $\psi \in \mathcal{I}$ that has non-zero image in the second factor. Denote by $[\phi], [\psi]$ the images of ϕ and ψ in $\mathcal{I}/\mathcal{I}_2$. Neither of these images is 0. Thus, the $\mathrm{Sp}(2g, \mathbb{Z})$-orbits of $[\phi], [\psi]$ generate a finite index subgroup of $\mathcal{I}/\mathcal{I}_2$. This entire subgroup is in the kernel of the map $\mathcal{I}/\mathcal{I}_2 \to \rho(\mathcal{I})/\rho(\mathcal{I}_2)$. This shows that $[\rho(\mathcal{I}) : \rho(\mathcal{I}_2)] < \infty$.

As in the proof of Theorem 1.5, the $k \geq 3$ case follows from Lemma 3.2. □

6. Proof of Theorem 1.7

Proof. Let G be either the fundamental group of the closed surface X with genus ≥ 2 or F_n with $n \geq 2$. Pick a prime p. Let K be the kernel of the map $G \to H_1(G, \mathbb{Z}/p\mathbb{Z})$. For any integer m, let $L_m \lhd K$ be the kernel of the map $K \to H_1(K, \mathbb{Z}/p^m\mathbb{Z})$. Let ρ be the homological representation corresponding to the cover given by the subgroup K.

Since K is a characteristic subgroup of G and L_m is a characteristic subgroup of K, we get that $L_m \lhd K$. Furthermore, since G/K and K/L_m are p-group, we have that G/L_m is a p-group, and is thus nilpotent.

Denote by $d(m)$ the nilpotence degree of G/L_m. By definition, the group $\mathcal{I}_{d(m)}$ acts trivially on G/L_m. Thus, it implies that $\mathcal{I}_{d(m)}$ acts trivially on $H_1(K, \mathbb{Z}/p^m\mathbb{Z})$. This means that the elements of $\rho(\mathcal{I}_{d(m)})$ are in the p^m-congruence subgroup of $\mathrm{GL}(H_1(K, \mathbb{Z}))$.

Fix $k > 0$. There exists $g \in \mathcal{I}_k$ and $i > 0$ such that $\rho(g)$ is not in the p^i-congruence subgroup of $\mathrm{GL}(H_1(K, \mathbb{Z}))$. This implies that $\rho(\mathcal{I}_k) \neq \rho(\mathcal{I}_j)$ for every j such that $j > d(i)$, $\rho(\mathcal{I}_j) \neq \rho(\mathcal{I}_k)$, as required.

□

References

[1] B. Farb and D. Margalit. *A primer on mapping class groups, volume 49 of Princeton mathematical series.* Princeton University Press, Princeton, NJ, 2012. ISBN 978-0-691-14794-9.

[2] F. Grünewald and A. Lubtozky. *Linear representations of the automorphism group of a free group.* Geom. Func. Anal. 18(5):1564–1608, 2009.

[3] F. Grünewald, M. Larsen, A. Lubotzky, and J. Malestein. *Arithmetic quotients of the mapping class group.* To appear in Geom. Func. Anal.

[4] A. Hadari. *Homological eigenvalues of lifts of pseudo-Anosov mapping classes to finite covers* (preprint) arxiv: 1712.01416

[5] A. Hadari *Non virtually solvable subgroups of mapping class groups have non virtually solvable representations*, to appear in Groups, Geom., and Dynamics.

[6] D. Johnson. *An abelian quotient of the mapping class group $\mathcal{I}_g$.* Math. Ann. 249(3):225–242, 1980.

[7] D. Johnson. *Conjugacy relations in subgroups of the mapping class group and a group-theoretic description of the Rochlin invariant.* Math. Ann. 249(3): 243–263, 1980.

[8] E. Looijenga. *Prym representations of mapping class groups.* Geom. Dedicata 64(1): 69–83, 1997.

[9] Yi. Liu. *Virtual homological spectral radii for automorphisms of surfaces*, arxiv: https://arxiv.org/abs/1710.05039.

[10] C. T McMullen. *Braid groups and Hodge theory.* Math. Ann. 355(3): 893–946, 2012.